Installation Instructions – Flip-Up Bracket Pin and Spring Warranty Kit

Note to Dealers: If you install this product for the consumer, please provide him/her with this owner's manual after installation.

This warranty kit is designed to replace worn-out springs for 2004 or beyond Flip-Up ZB™ brackets that use a pin and "C" clip attachment. Please read these instructions thoroughly before attempting to install this warranty kit. Proper installation is required for compliance with Profile Design's warranty policy. If you are not familiar with the installation of aerobars, please seek the assistance of your local Profile Design dealer by logging on to **www.profile-design.com** and using "dealer search" or by calling Profile Design's customer service number.

Tools and materials required: Needle-nose pliers, flat head screwdriver, tools as required for aerobar disassembly/assembly

1. Remove the existing Flip-Up ZB™ bracket from the aerobar.
2. Using the pliers or flat head screwdriver, remove the "C" clip from the pin on the existing ZB™ bracket.
3. Remove the existing pin and worn springs. Set the worn springs, pin, and "C" clip aside.
4. Insert a new pin (#1) through the first section of the bottom portion of the bracket (#4) and through the first section (#5) of the bridge. Using the flat head screwdriver, press the first new spring between the bridge and the bracket so that the pin can be pressed through the spring and into the center section of the bottom portion of the bracket. Repeat this step for the second spring, pushing the pin through bridge.
5. Once the pin is pressed through the springs and bridge, press it through the last section of the bottom portion of the bracket so that the head is flush with the bracket and the recess for the "C" clip is visible on the other side.
6. Using the pliers, snap the new "C" clip (#2) around the pin.
7. Re-check the pins and "C" clips to make sure the attachment is secure.
8. Re-assemble the aerobar per its specific instructions.

⚠ WARNING

- A creaking component can be a sign of potential problems. Make sure all contact surfaces between components are clean, all bolt threads are greased and tightened to Profile Design's (or the bike manufacturers) specifications and all components are properly sized to fit together. If you continue to experience creaking stop using the Profile Design component and call Profile Design customer service. [AP1100-2-1]
- Under tightening a bolt can result in a part coming loose while riding and an over tightened bolt can break unexpectedly while riding also resulting in a loss of control. All bolts must be tightened to Profile Design's (or the bike manufacturer's) specifications. [AP1100-3-1]
- Periodically, closely examine all surfaces of this Profile Design component (after cleaning) in bright sunlight to check for any small hairline cracks or fatigue at "stress points" (such as welds, seams, holes, points of contact with other parts etc.). If you see any cracks, no matter how small, stop using the part immediately and call Profile Design customer service. [AP0302-4--2]
- Whenever you install any new component on your bike make sure you thoroughly try it out close to home (with your helmet) where there are no obstacles or traffic. Make sure everything is working properly before going off on a ride or to a race. [AP1100-5-1]
- Racing (road, mountain or multi sport) places extreme stress on bicycles and their components (like it does riders) and significantly shortens their usable life. If you participate in these types of events, the lifetime of the product may be significantly shortened depending upon the level and amount of racing. The "normal wear" of a component may differ greatly between competitive and non-competitive uses, which is why professional lever riders often use new bikes and components each season as well as having their bikes service by professional mechanics. Particular care should be placed in the regular examination of your bicycle and it's components to insure your safety. [AP1100-6-1]
- A number of factors can reduce the life of this component to less than its warranty period. Rider size and/or strength, high mileage, rough terrain, abuse, improper installation, adverse weather conditions and crashes or accidents can all contribute to the acceleration of the life of this component. The more factors that are met, the more the life of the component is reduced. [AP0801-7-2]
- Make sure you periodically recheck ALL aerobar bolts for tightness. Many of these bolts can loosen due to road vibration, which can cause possible breakage and loss of control. Make sure only the Profile Design supplied bolts are used. [AB1100-1-1]
- Aerobars can require riding positions that are new or different to many riders. It is advisable to practice using these bars in a low traffic area to become accustomed to any changes in the steering or handling characteristics of the bike. Please exercise caution when using these types of handlebars for the first time. Also make sure that you continue to look forward when riding and do not look down towards the ground. [AB1100-2-1]
- If you ever crash and the handlebar, aerobar OR stem is damaged in any way, (slight bends or scrapes) ALL ADJOINING PARTS should be replaced as there may be undetectable damage to either part. Call Profile Design customer service and ask about our "Crash Replacement Policy". [AB1100-3-1]
- Some light weight aluminum and carbon fiber handlebars are not compatible with aerobar assemblies, please refer to the handlebar manufacturer's installation instructions for this information. [AB1100-4-1]
- Whenever an aerobar-equipped bike is placed on a roof rack, remove the armrest pads (if they are Velcro attached). Pads lost during transport are not covered by Profile Design Warranty. [AB101-6-1]

Profile Design, LLC
Worldwide Limited Warranty

Profile Design LLC warrants to the original retail purchaser ("you") that the Profile Design product for which they received this warranty is free from defects in material and workmanship for two years from the date of original retail purchase. This warranty is not transferable to a subsequent purchaser. Profile Design's sole obligation under this warranty is to repair or replace the product, at Profile Design's option. Profile Design must be notified in writing of any claim under this warranty within 60 days of any claimed lack of conformity of the product.

Warranty Limitations

The duration of any implied warranty or condition, of merchantability, fitness for a particular purpose, or otherwise, on this product shall be limited to the duration of the express warranty set forth above. In no event shall Profile Design be liable for any loss, inconvenience or damage, whether direct, incidental, consequential or otherwise, resulting from breach of any express or implied warranty or condition, of merchantability, fitness for a particular purpose, or otherwise with respect to this product, except as set forth herein. Some states or countries do not allow limitation on how long an implied warranty lasts and some do not allow exclusions or limitations of incidental or consequential damages, so the above limitations or exclusions may not apply to you. This warranty gives you specific legal rights, and you may also have other rights, which may vary, from location to location. This warranty will be interpreted pursuant to the laws of the United States. The original English language version/meaning of this warranty controls over all translations and Profile Design is not responsible for any errors in translation of this warranty or any product instructions. This warranty is not intended to confer any additional legal, jurisdictional or warranty rights to you other that those set forth herein or required by law. If any portion of this warranty is held to be invalid or unenforceable for any reason, such finding will not invalidate any other provision. For products purchased in countries

other than the United States please contact Profile Design's authorized distributor in that respective country.

Warranty Service Options

To obtain service under this warranty you must either:

(1) Bring or send your Profile Design product, together with this warranty, the retail seller's original receipt or other satisfactory proof of the date of purchase to the retailer where you purchased the item or another authorized Profile Design retailer, or

(2) Send your Profile Design product (with the return authorization number on the outside of the shipping container and affixed to the product), together with the retail seller's original receipt or other satisfactory proof of the date of purchase to Profile Design 2677 El Presidio St. Long Beach, CA 90810 USA. You must first obtain a return authorization number by calling Profile Design at (310) 884-7756 ext. 161 (or send an email to warranty@profile-design.com) prior to returning the product to Profile Design.

Profile Design may require that you complete and sign a warranty replacement request form before processing your warranty claim.

Any postage, insurance or other shipping costs incurred in sending your Profile Design product for service under either option above is your responsibility. Profile Design will not be responsible for products lost or damaged in shipping.

For products purchased in countries other than the United States please contact Profile Design's authorized distributor in the country where the product was purchased. They can be found on our website at www.profile-design.com

Crash Replacement Policy

Profile Design understands that crashes can happen. As a result Profile Design will attempt to ease the pain by offering you a replacement product for 30% below Profile Design's current suggested retail price in your respective country. All other provisions of this warranty apply and the procedures outlined for warranty service apply also to the crash replacement policy. Profile Design will make the final decision on whether the part will be covered under the crash replacement policy.

Warranty Exclusions

Retailers and sellers of Profile Design products are not authorized to modify this warranty in any way. It is your responsibility to regularly examine the product to determine the need for normal service or replacement. This warranty does not cover the following:

- Products that have been modified, neglected or poorly maintained, used for commercial purposes, misused or abused or involved in accidents.
- Damage occurring during shipment of the products (such claims must be presented directly to the shipper).
- Damage to products resulting from improper assembly or repair, the use or installation of parts or accessories not compatible with the original intended use of the product, or the failure to follow the product warnings and usage instructions.
- Damage or deterioration to the surface finish, aesthetics or appearance of the product.
- The labor required to remove and/or re-fit and re-adjust the item covered by this warranty.
- Normal wear to the product.
- Any products for which the consumer does not follow the warranty procedures outlined above.

For the current version of this warranty please visit our website at www.profile-design.com

(© June 2003 Profile Design)

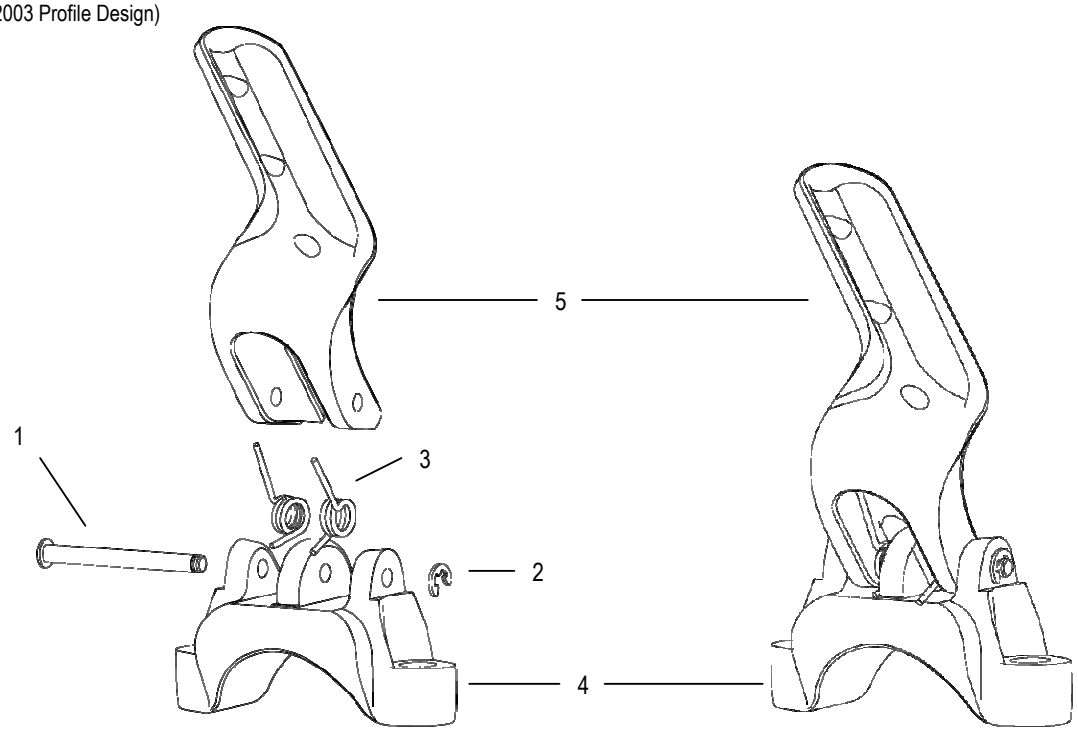

Bracket – Disassembled

Bracket - Assembled

Flip-Up Bracket Pin and Spring Warranty Kit			
Qty	**Part #**	**Ref.#**	**Part Description**
2	550023	1	Steel Pin for Forged Flip Up
2	550026	2	C Clip for Forged Flip Up Brkt
4	312796	3	Spring-Flip Up set
2		4	ZB™ Bracket – Bottom portion
2		5	ZB™ Bracket – Bridge